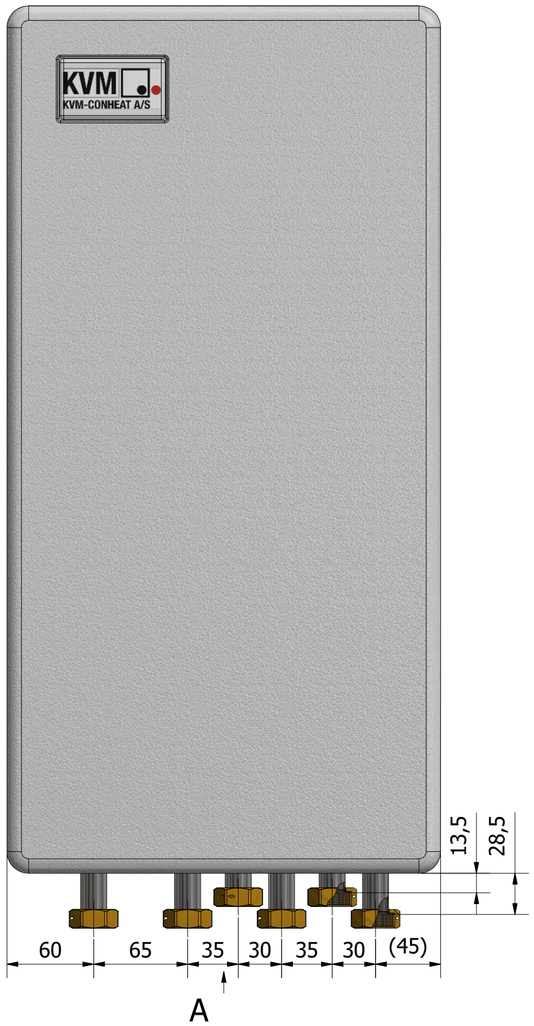

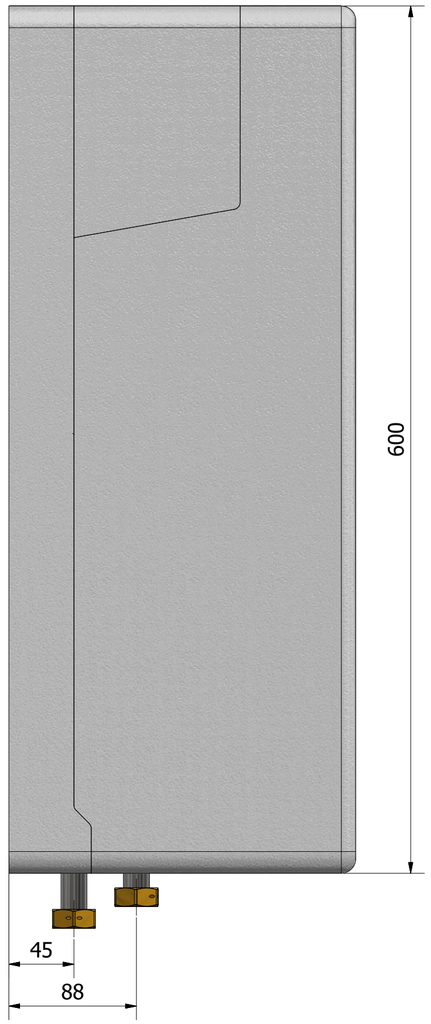

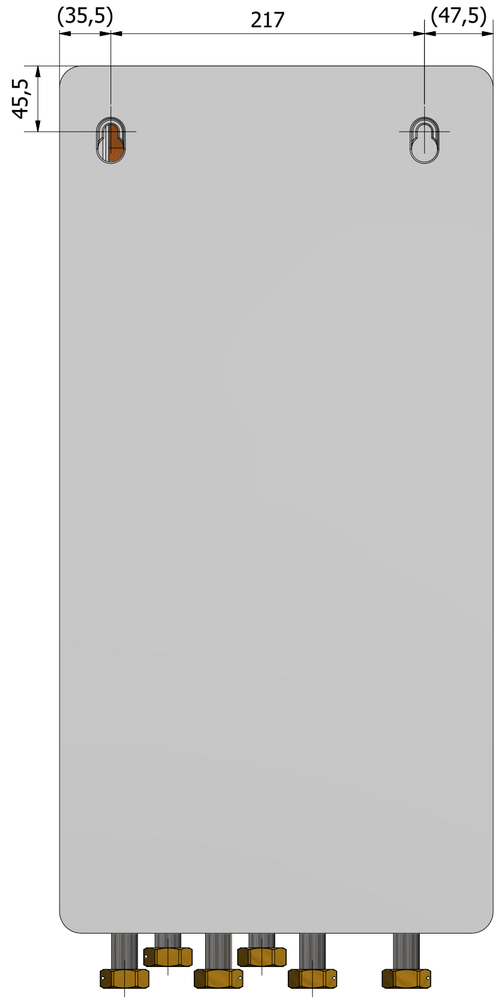

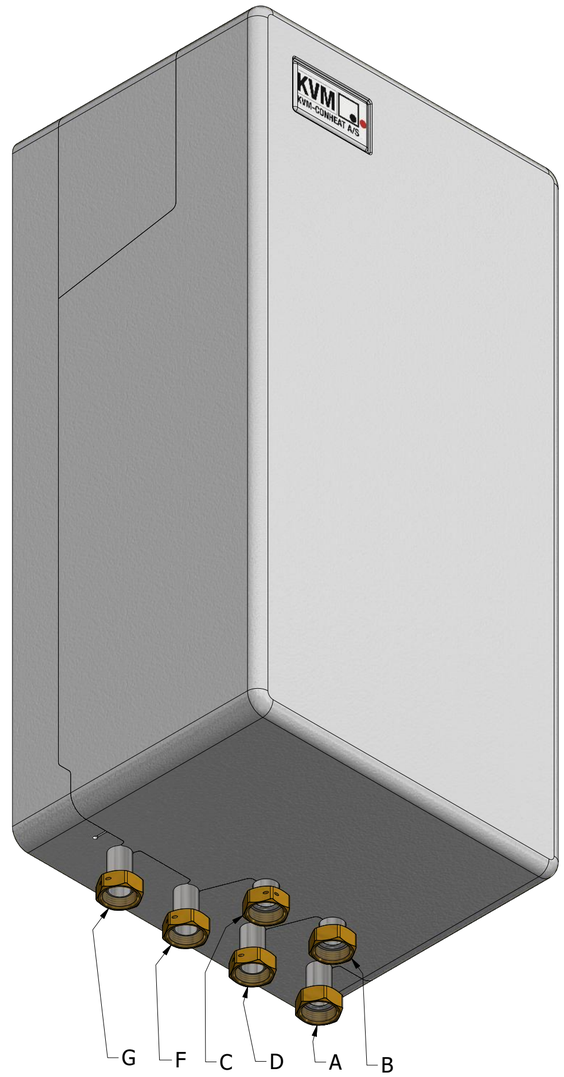

A (1 : 3)

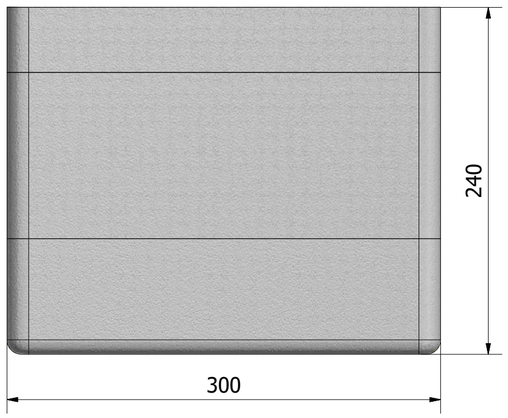

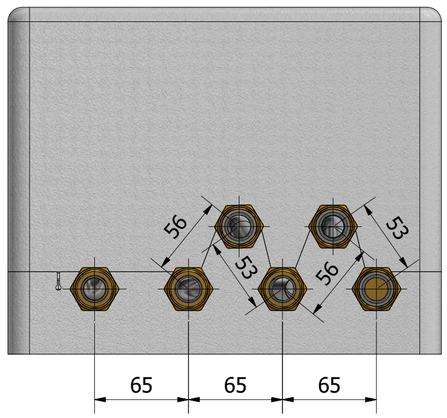

A. Primaire aanvoer - DN20
B. Primaire retour - DN20
C. Koud water - DN20
D. Warm Tapwater - DN20
F. Secundaire aanvoer - DN20
G. Secundaire retour - DN20

KVM-Genvex Bringing comfort to life.	Sverigesvej 6, DK-6100 Haderslev, Denmark Tel: (+45) 73 53 27 00		
Project number/name	Rev.	Designed by: Viktor Kalenikov	Sheet number: 1 /3
Unit stock number: 31200104	Unit type: System 2 Slimline Mini	Approved by: Christen Lautrup	Approved date: Pending
General Tolerances: DIN 2768-1 V.Coarse	PERFORMANCE: Heating kW, Tap water kW	Projection	Scale: 1 : 3 — A2

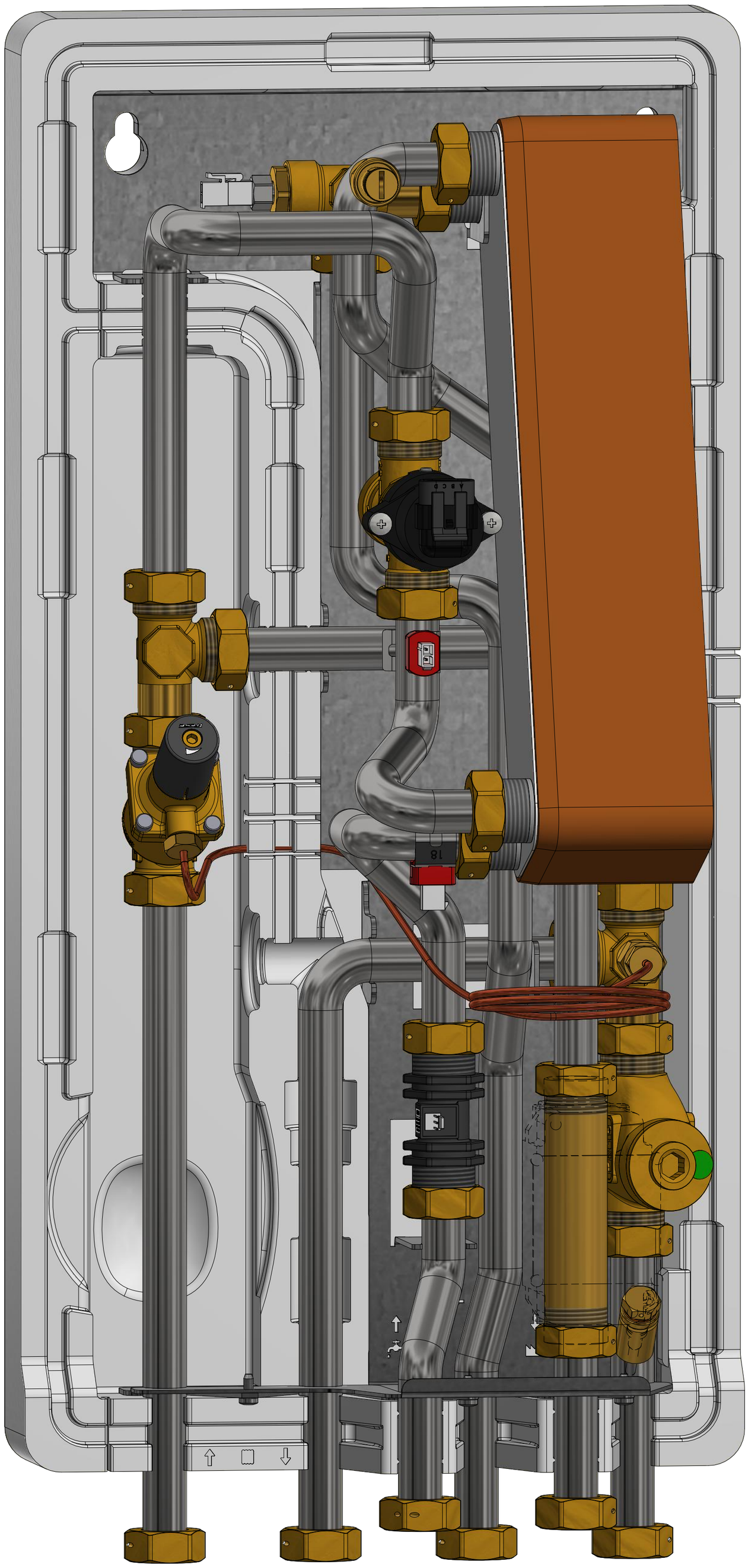

KVM-Genvex Bringing comfort to life. Sverigesvej 6, DK-6100 Haderslev, Denmark Tel: (+45) 73 53 27 00			
Project number/name	Rev.	Designed by Viktor Kalenikov	Sheet number 2 /3
Unit stock number 31200104	Unit type System 2 Slimline Mini	Approved by Christen Lautrup	Approved date: Pending
General Tolerances DIN 2768-1 V.Coarse	PERFORMANCE Heating kW / Tap water kW	Projection	Scale 1 : 1,5 A2

PARTS LIST			
ITEM	PART NUMBER	QTY	STOCK NUMBER
3	EPP cover - Part 1	1	103151
4	EPP cover - Part 2	1	103152
5	EPP cover - Part 3	1	103153
6	Double wall D.H.W heat exchanger	1	10XXXX
7	Vision PCB box	1	10XXXX
8	Vision DHW controller	1	101521
9	Immersion temperature sensor	1	100407
10	Clip-on temperature sensor	3	100406
11	Stepper motor Kvs=1,9	1	10XXXX
12	Flow sensor	1	105833
13	Frese PV Compact DN15 Kvs. 2,9 0,05-0,30 bar	1	104453
14	Strainer	1	105875
15	Air bleeder	1	100853
16	Flow limiter 12 l/min	1	10XXXX

A

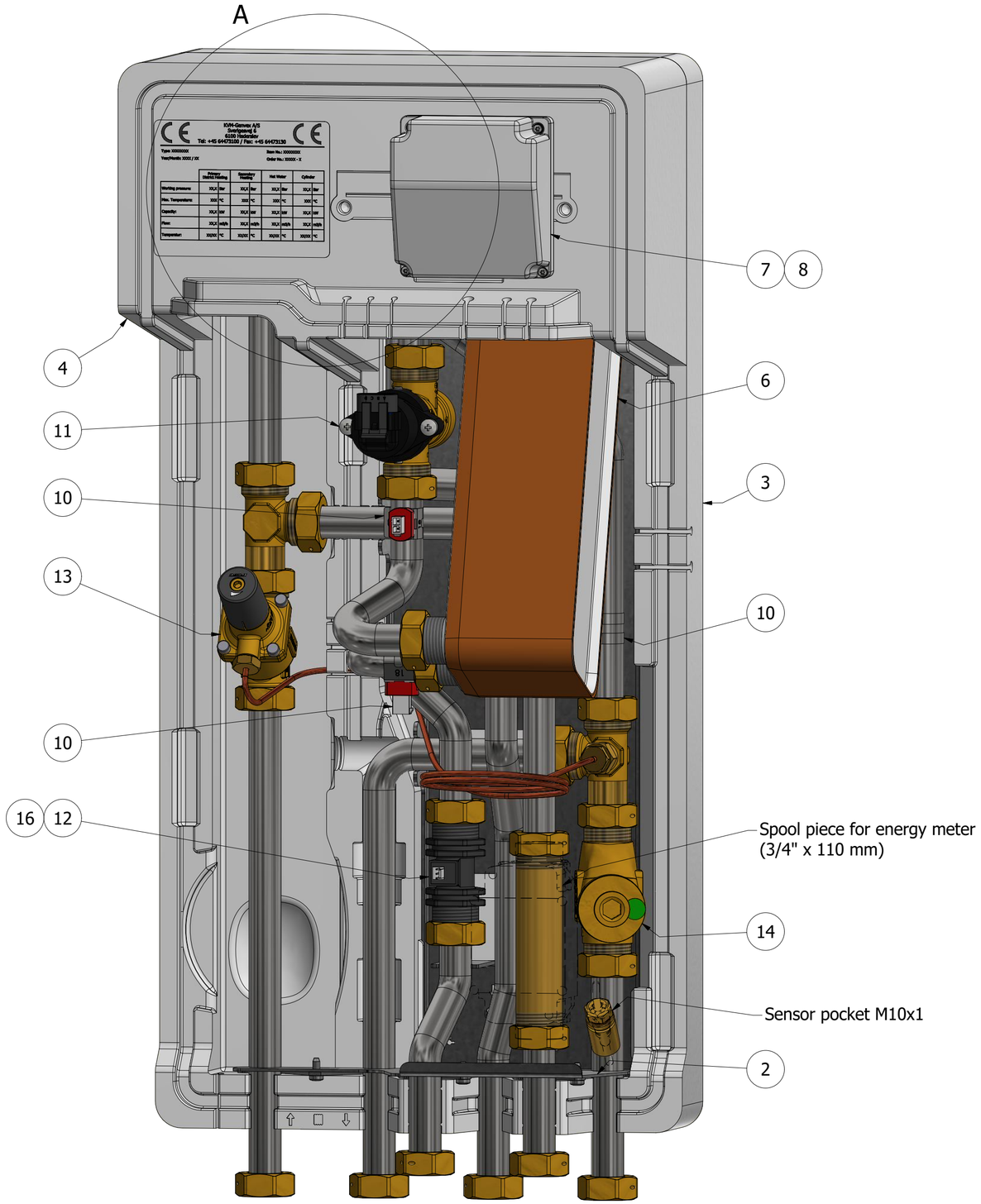

A (1 : 1,5)

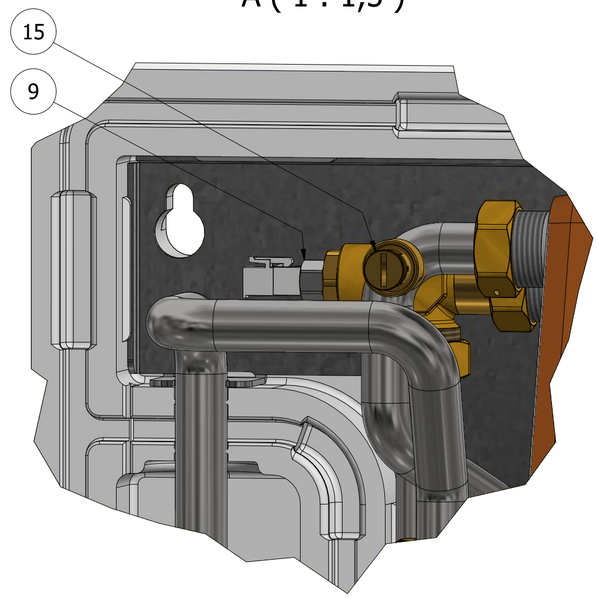

KVM-Genvex Bringing comfort to life. Sverigesvej 6, DK-6100 Haderslev, Denmark Tel: (+45) 73 53 27 00			
Project number/name	Rev.	Designed by Viktor Kalenikov	Sheet number 3 /3
Unit stock number 31200104	Unit type System 2 Slimline Mini	Approved by Christen Lautrup	Approved date: Pending
General Tolerances DIN 2768-1 V.Coarse	PERFORMANCE Heating kW / Tap water kW	Projection	Scale 1 : 2 A2